A235BU - Dixon Steam, Hot Water & Food Hose 7 Bar

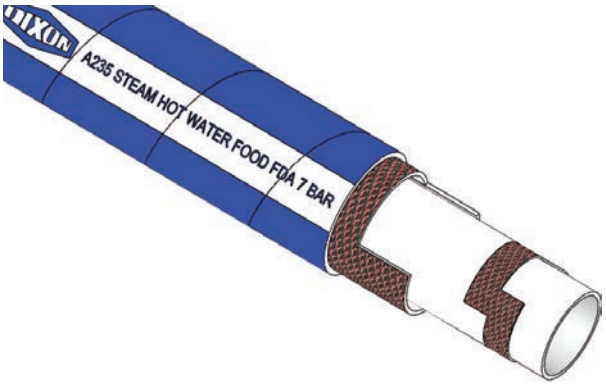

Technical Characteristics	
Application	Multi-purpose steam, hot water and food hose. Used in food & beverage industry
Cover	Blue mandrel wrap, ozone and weather resistant pin pricked EPDM
Branding	DIXON LOGO, A235 STEAM HOT WATER FOOD FDA 7 BAR
Reinforcement	High tensile strength textile plies
Lining	White food grade EPDM rubber FDA approved compounds
Temperature	From -20°C to +170°C (STEAM) +95°C (HOT WATER)
Safety Factor	10:1

Sizes

I.D (mm)	O.D (mm)	Max Working Pressure (Bar)	Min Burst Pressure (Bar)	Min Bend Radius (mm)	Weight (Kg/Mtr)
13	24	7	70	91	0.40
16	28	7	70	112	0.50
19	32	7	70	133	0.60
25	39	7	70	175	0.80

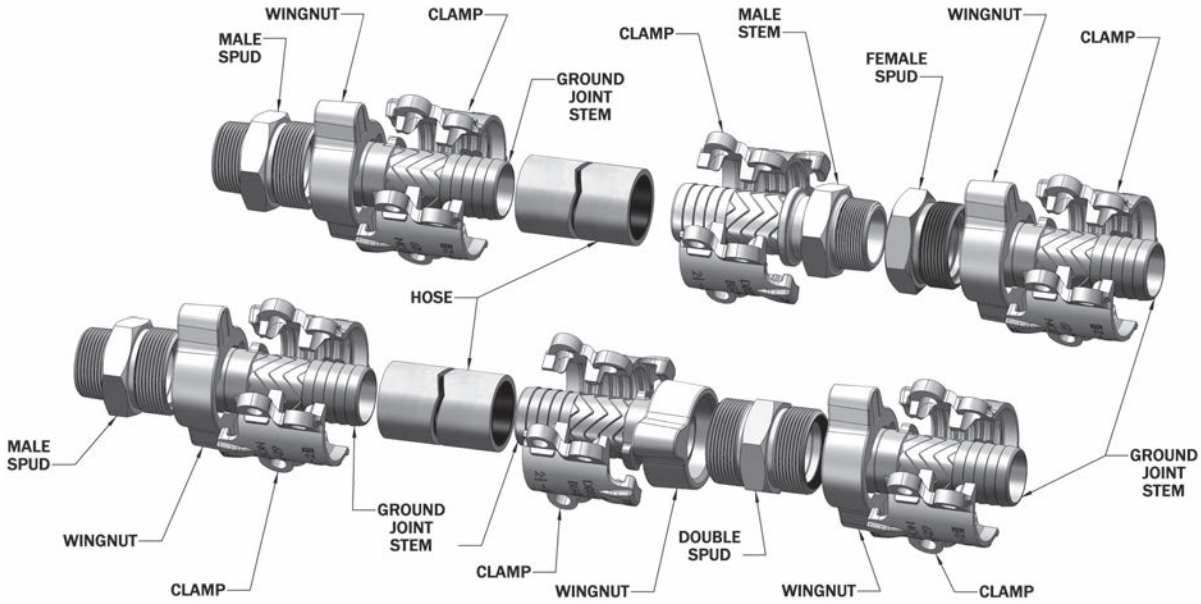

STEAM IS DANGEROUS. WE STRONGLY RECOMMEND THE USE OF GENUINE DIXON BOSS STEAM COUPLINGS AND CLAMPS. ONLY HOSE FITTINGS, CLAMPS AND ACCESSORIES APPROVED FOR STEAM SERVICE SHOULD BE USED.

All Hose Assemblies compliant with Pressure Equipment Directive 2014/68/EU

We reserve the right to change hose specifications without prior notice